REV.	DATE	ECR NO.	DESCRIPTION
NC	06/01/09	XXXXXX	INITIAL RELEASE

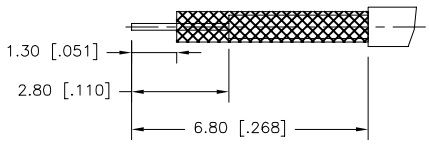

RECOMMENDED
CABLE STRIPPING DIM'S

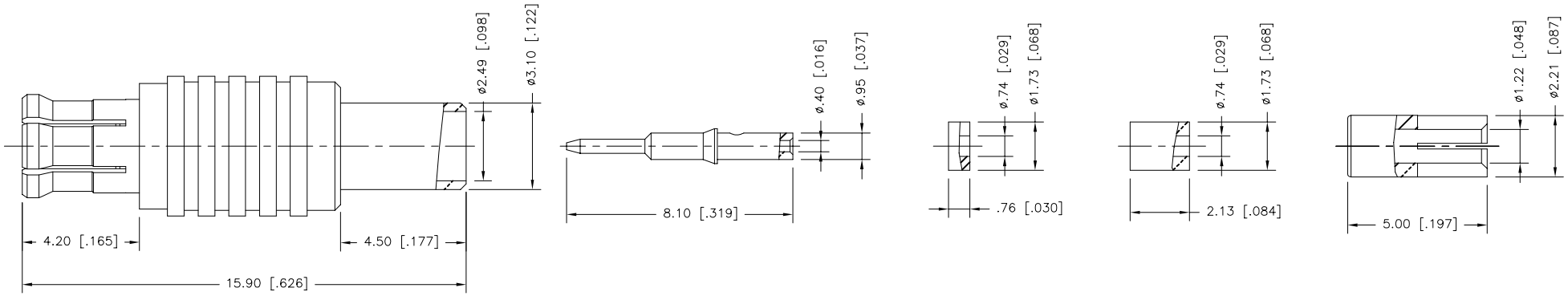

NOTES:
1. CRIMPED FERRULE
   HEX CRIMP SIZE .105"
2. CRIMPED CONTACT PIN
   SQ. CRIMP SIZE 0.7 mm

	DESCRIPTION	MATERIAL	FINISH	QTY
8	INNER FERRULE	BRASS	GOLD	1
7	SLEEVE	BRASS	GOLD	1
6	INSULATOR	PTFE	NATURAL	1
5	CONTACT	BRASS	GOLD	1
4	HOUSING	BRASS	GOLD	1
3	INSULATOR	PTFE	NATURAL	1
2	INSULATOR	PTFE	NATURAL	1
1	BODY	BRASS	GOLD	1

UNLESS OTHERWISE SPECIFIED DIMENSIONS ARE IN MILLIMETERS. DIMENSIONS IN [ ] ARE IN INCHES AND FOR CUSTOMER REFERANCE ONLY.

UNLESS OTHERWISE SPECIFIED TOLERANCES FOR MILLIMETERS ARE:
0.5 – 8mm ± 0.20mm
8 – 30mm ± 0.40mm
30 – 120mm ± 0.50mm

UNLESS OTHERWISE SPECIFIED TOLERANCES FOR INCHES ARE:
.020 – .315 = ± 0.007"
.315 – 1.180 = ± 0.015"
1.180 – 4.724 = ± 0.020"

DO NOT SCALE DRAWING

APPROVALS		DATE
DRAWN	J.CHENG	06/01/09
CHECKED		
ISSUED		
SHEET	1 OF 1	

CAD FILE C:/CONNEX/252204.DWG

Amphenol Connex

PART DESCRIPTION
MCX CRIMP PLUG
(FOR 1.13 MM CABLE)

PART NO. 252204

DWG. NO. 252204.DWG | REV. NC | SIZE A | SCALE NA